HOW FAST IS THE WIND?

Levels

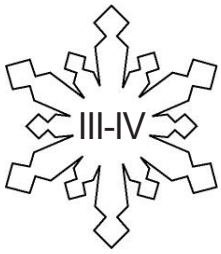

Grades 5-8

Overview:

Traditional knowledge of wind is important to indigenous people for many reasons, including success in hunting and safety in travel. Knowledge of wind speed and direction are vital to many current professions, including accurate weather prediction. In this activity, students build an anemometer then measure wind speed in areas of differing topography to study how natural and man-made topography affects wind speed.

Objectives:

The student will:

- build an anemometer;
- measure wind speed at two different locations;
- compare wind speed measurements to determine if topography has an affect.

Targeted Alaska Grade Level Expectations:

Science

[7-8] SA1.1 The student demonstrates an understanding of the processes of science by asking questions, predicting, observing, describing, measuring, classifying, making generalizations, inferring, and communicating.

[8] SD2.1 The student demonstrates an understanding of the forces that shape Earth by interpreting topographical maps to identify features (i.e., rivers, lakes, mountains, valleys, island, and tundra).

[8] SG2.1 The student demonstrates an understanding of the bases of the advancement of scientific knowledge by describing how repeating experiments improves the likelihood of accurate results.

Vocabulary:

anemometer – an instrument that measures the speed and force of the wind; the most basic type of anemometer consists of a series of cups mounted at the end of arms that rotate in the wind; the speed with which the cups rotate indicates the wind speed

revolution – the motion of an object around a point, especially around another object or a center of mass; a single complete cycle of such motion

topographic map – a map depicting local land features and elevation

topography – the shape, height, and depth of the land surface in a place or region; physical features that make up the topography of an area include mountains, valleys, plains, and bodies of water; man-made features such as roads, railroads, and landfills are also often considered part of a region's topography

wind speed – the speed at which the air in the atmosphere is moving

Whole Picture:

The term wind is used to describe the movement of air. Air moves from higher pressure toward lower pressure creating wind. Wind can also be modified by mountains and turned by the spinning of Earth.

An anemometer measures the force or speed of the wind. A common anemometer, such as the one constructed in this lesson, uses cups mounted on four horizontal arms at equal distance from each other on a vertical shaft. The air flow past the cups turns the cups in proportion to the speed of the wind.

Wind direction and speed are monitored by meteorologists, pilots, sailors, scientists, architects and others who need to know Earth's weather activity. From planning trips, to building sound structures, to understanding what shapes Earth, wind speed and direction are integral. For example, rural indigenous subsistence hunters need information on wind speed and direction to aid in travel safety and animal tracking success.

HOW FAST IS THE WIND?

Many anemometers convert the revolutions per minute into wind speed measured in several different ways:

- ***Miles per hour (mph)*** – unit of speed measuring the number of miles covered in a period of one hour.
- ***Knots*** – unit of speed measuring one nautical mile per hour. A nautical mile is slightly longer than a mile, and corresponds to one arc minute of latitude along any meridian.
- ***Meters per second (m/s)*** – unit of speed measuring the number of meters covered in one second.
- ***Feet per second (f/s)*** – unit of speed that tells the number of feet covered in one second.
- ***Kilometers per hour (km/h)*** – unit of speed that tells the number of kilometers covered in one hour.

A crane operator, for example, needs to know wind speed and direction when he or she plans to operate a tall crane. A landfill operator must know the behavior of the wind in order to maintain odor control.

The speed at which the wind is moving the clouds is especially important in forecasting (predicting) the weather. A scientist may study the way in which wind causes erosion.

Materials:

- Flexible straws (four per student)
- Condiment cups (four per student)
- Balsa wood or mat board (very thin) cut to 1½" square (two per student)
- Pencils with flat erasers (one per student)
- Washers (one per student)
- T-pins (one per student)
- Sticker (one per student)
- Stopwatch
- Computer with Internet access and multimedia projection capability
- DIGITAL LECTURE: "Chief Robert Charlie Talks About Wind" available on the UNITE US website (uniteusforclimate.org)
- STUDENT INSTRUCTION SHEET: "Build an Anemometer"
- STUDENT WORKSHEET: "Measuring Wind Speed"
- STUDENT WORKSHEET: "Wind Vocabulary"

Activity Preparation:

1. Bookmark DIGITAL LECTURE: "Chief Robert Charlie Talks About Wind" (uniteusforclimate.org).
2. Gather materials for "Build an Anemometer".
3. Plan ahead for students to take wind speed measurements at two different locations, with different topographic features. Examples might include a hillside versus a riverbank, a parking lot versus a wooded area, an open field versus a space between two buildings, etc. If possible, allow different groups to measure different data sets to add to later discussion.

Activity Procedure:

1. Introduce DIGITAL LECTURE: "Chief Robert Charlie Talks About Wind" (uniteusforclimate.org). Students should listen and mentally note two important reasons wind is important in Alaska Native traditional knowledge. When the video segment is over, ask students to review reasons traditional knowledge of wind is important. (Charlie discussed hunting and travel, however students may have additional comments from personal experience.)
2. Explain students will build an anemometer, an instrument used to measure wind speed. Using the STUDENT INSTRUCTION SHEET: "Build an Anemometer" as a guide, lead students through the process of building anemometers.
3. Hand out the STUDENT WORKSHEET: "Measuring Wind Speed." Explain students will work in teams to measure the wind speed using handmade anemometers. Assign students to teams, then each team to one of the determined topographic locations. Ask students to complete the Hypothesis section and read the procedure aloud as a class.

4. Take students outside. Ask them to use the anemometers to measure wind speed. Using the stopwatch to keep time, students should count how many times their anemometer spins in 60 seconds and record their measurements in the data section of their worksheets. The procedure is repeated three times at each location.
5. Bring students inside and instruct them to complete the "Analysis of Data" and "Conclusion" on their own or in teams.
6. As a class, look up the wind speed forecast at http://climate.gi.alaska.edu/Wx/forecast.html. Discuss how this data could be used to predict weather.
7. Ask students to complete the remainder of the worksheet, "Further Discussion".
8. Hand out STUDENT WORKSHEET: "Wind Vocabulary" and ask students to complete individually, in groups, or as a class.

Language Links:

Alaska Native people have always been careful observers of the weather. Their languages are rich in words describing weather. Ask a local Native language speaker to provide the words in the local dialect for the weather phenomenon listed in the chart below. The local dialect for these words may differ from the examples provided. Share the words with students to build fluency in local terms related to weather. Include local words in songs, stories and games when possible.

Bilingual Vocabulary Unit 2: Exploring the Land Around You

English	Gwich'in	Denaakk'e	Lower Tanana	Deg Xinag	Your Language
Rain / it's raining	Tsin / ahtsin	Kohn / yołee hødelaatlghaanh	Chonh	Chonh	
Wind / it's windy	Ahtr'aii	Ts'ehy	Eltr'eyh	Xidetr'iyh	
Snow'it's snowing	Zhah	Tseetl	Yeth	Yith	
Clouds / it's cloudy	Zhee k'oh / gwit'eh goo'aii	Kk'ul / yokk'uł hoolaanh	K'wth / k'wth xulanh	Q'uth	
Sun / it's sunny	Drin oozhrii	So / Soleł	Sro	No'oy	

Extension Ideas:

Study a topographic map of the entire state then compare statewide wind speed predictions on the National Weather Service site (http://forecast.weather.gov) to topographic features and see if any patterns emerge.

Using a topographic map of your community, study the features and discuss which could change over time (hills could erode, forests could burn in a fire, the town could grow much larger, streets could be paved, parking lots installed, etc.). Make a model of how these changes could change wind directions, speed and patterns.

Using a topographic map of your community, plan an overland snow machine route, round trip, within a 50-mile radius. Plan for ease of access but account for protection from the wind and weather.

Critical Thinking Questions:

1. How is topography related to wind speed and direction?
2. What topographical features would you study if you were planning a moose hunt? An overland snow machine trip?
3. If you were going to build a wind powered generator, where would you put it?
4. How could you find out more about how landforms affect wind?
5. If you changed the altitude (height) of an anemometer at the same location, what would your wind speed reading show?

6. How could you compare the reading on your hand made anemometer of revolutions per minute with the National Weather Service wind speed given in miles per hour?
7. If your community was surrounded by forest, then experienced a devastating forest fire that eliminated one quarter of the tree cover, how might the wind patterns change?

Answers:

STUDENT WORKSHEET: "Measuring Wind Speed"

Answers will vary.

STUDENT WORKSHEET: "Wind Vocabulary"

1. topography
2. anemometer, wind speed
3. topographic map
4. revolution

Answers to matching:

mph = unit of speed measuring the number of miles covered in a period of one hour
knots = unit of speed measuring one nautical mile per hour
m/s = unit of speed measuring the number of meters covered in one second
f/s = unit of speed that tells the number of feet covered in one second
km/h = unit of speed that tells the number of kilometers covered in one hour

BUILD AN ANEMOMETER

STUDENT INSTRUCTION SHEET

Materials:

- Flexible straws (four per student)
- Condiment cups (four per student)
- Balsa wood or mat board (very thin) cut to 1-1/2" square (two per student)
- Pencils with flat erasers (one per student)
- Washers (one per student)
- T-pins (one per student)
- Sticker (one per student)

Procedure:

1. Bend each straw at a 90 degree angle as shown in Figure 1.
2. Tape two of the straws together as shown in Figure 2.
3. Tape the remaining two straws together so there are two sets that look the same (Figure 3).
4. Tape the two sets of straws together to make the frame (Figure 4).
5. Tape a wood square to the center of the straws on each side of the frame (Figure 5).
6. Put a sticker in the bottom of one of the condiment cups.
7. Attach one cup to the end of each straw. Make sure they are all pointing the same direction (Figure 6).
8. Poke the pin through the center of the wooden squares in the center of the frame. Put the end of the pin through the washer, then push the pin into the pencil eraser (Figure 7).

Figure 1

Figure 2

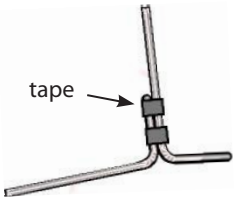

Figure 3

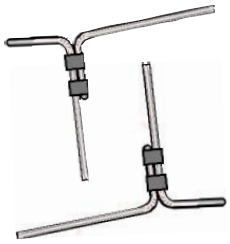

Figure 4

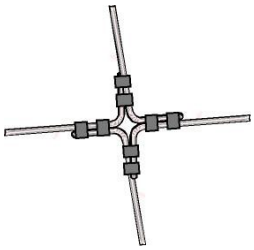

Figure 5

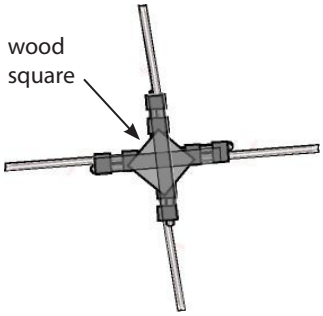

Figure 6

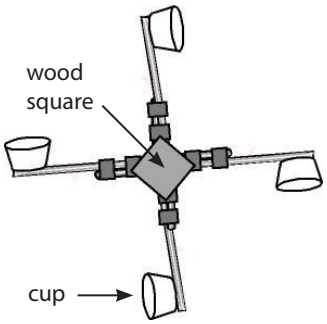

Figure 7

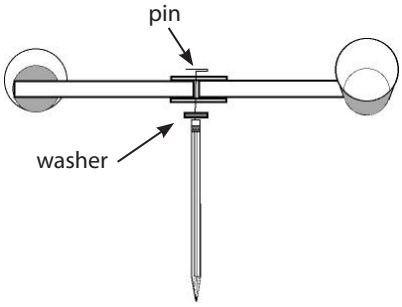

NAME: _____

MEASURING WIND SPEED

Testable Question:

Does wind speed change due to differences in topography?

Hypothesis:

Write your choice.

Topography _____ influence wind speed.
does / ***does not***

Experiment:

Materials:

- Anemometer
- Stopwatch

Preparation:

With the permission and/or direction of your teacher, choose two different locations to take wind speed measurements. The two places should have different topography, such as a hillside and a parking lot or a riverbank and wooded area.

Procedure:

1. Hold the anemometer so that the wind is blowing directly at it, causing it to spin around.
2. Work in teams. One student will serve as the timer, another as the counter.
3. **Counter**: watch the cups, looking for the one with the sticker. When it is visible, say "start."
4. **Timer**: when the counter says "start," start the stopwatch. When the stopwatch reaches 60 seconds, say "stop."
5. **Counter**: One revolution is a complete turn of the anemometer. Count revolutions by counting the number of times the sticker appears. After the timer says "stop," record the number of rotations in the Data section.
6. Switch positions and repeat.
7. Repeat steps 3 through 6 three times at location 1.
8. Move to location 2 then repeat the procedure.

Data:

In the chart below, record the number of times the anemometer rotated in the 60-second period.

Location 1:		**Location 2:**	
Test	**Number of Revolutions**	**Test**	**Number of Revolutions**
1		1	
2		2	
3		3	

Analysis of Data:

Take an average of the three measurements for each location.

NAME: _____

MEASURING WIND SPEED

Location 1:

(_____ + _____+_____) ÷ 3 = _____ rotations per minute
test #1 test #2 test #3

Location 2:

(_____ + _____+_____) ÷ 3 = _____ rotations per minute
test #1 test #2 test #3

Conclusion:

Circle the best answer below. Choose from the words in **bold**.

Compare results from Location 1 and Location 2.

There was **no difference** / **some difference** / **significant difference** in wind speed between the two locations.

Was your hypothesis proved or disproved? _____

Why do you think this is? _____

_____

_____

Further Discussion:

Visit the National Weather Service website and note the prediction for today's wind speed: _____ mph

Why do you think the National Weather Service often gives a range of possible wind speed?

_____

_____

Name two reasons that traditional knowledge of wind is important for Alaska Native People.

_____

_____

What kinds of professions need to know about wind speed? Name at least three.

_____

_____

_____

NAME: _____ STUDENT WORKSHEET

WIND VOCABULARY

Directions: Using the word bank, fill in the blank with the correct term.

Word Bank

wind speed
topography
topographic map
anemometer
revolution

1. Mountains, rivers and roads are examples of _____.
2. A(n) _____ measures _____.
3. A(n) _____ identifies local landforms.
4. One complete turn of a wheel equals one _____.

Directions: The following terms often are used to describe wind speed. Match the acronym or word to the corresponding definition.

mph	**unit of speed measuring one nautical mile per hour**
knots	**unit of speed that tells the number of kilometers covered in one hour**
m/s	**unit of speed measuring the number of meters covered in one second**
f/s	**unit of speed measuring the number of miles covered in a period of one hour**
km/h	**unit of speed that tells the number of feet covered in one second**

Early anemometer

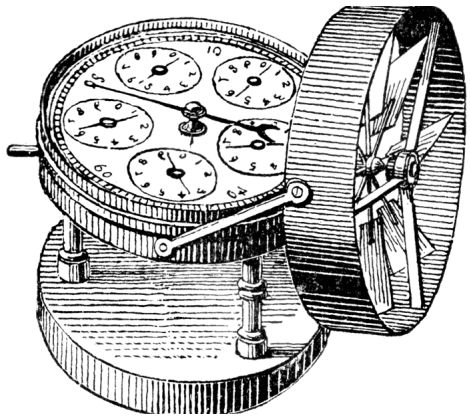

Florida Center for Instructional Technology

"An instrument for indicating the velocity or pressure of the wind; a wind-gage." —Whitney, 1902

Modern anemometer

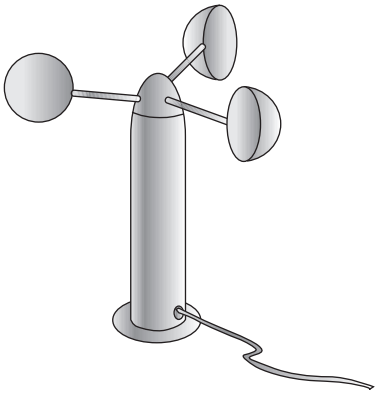

Wind speed and pressure is important information recorded by modern anemometers at weather stations worldwide.